GSR -2108T
Mini PLC with Display Unit

USER MANUAL

GMT Industrial Electronics Industry and Trade Co., Ltd.

GETTING STARTED...

GSR-2108T Compact PLC with Display

GMTCNT

This user manual provides the operating instructions for the Mini PLC with Display, product reference GSR-2108T.

Please review this user manual thoroughly before operating your device. Retain it for future reference.

The user assumes responsibility for any damage, loss, or injury to individuals that may arise from noncompliance with the warnings outlined in the user manual. In such instances, the device will be considered out of warranty.

Preface

GMT Industrial Electronics Ind. and Trade Co. Ltd., with three decades of expertise in industrial control, process control, and automation, was founded with a wholly technical team to address challenges deemed insurmountable in this region and to innovate and commercialize solutions in these domains.

In addition to PLCs and Mini PLCs equipped with Displays, for which GMT possesses complete production and design technology, the company also provides HMIs (Operator Panels), AC inverters, Servo Motors and Drivers, Stepper Motors and Drivers, as well as serial communication and RF operating products, all aimed at delivering comprehensive solutions for the industry.

GMT products are extensively utilized by manufacturers in the Food, Textile, Packaging, Extruder, Press, and Wood Machinery sectors, as well as in factory automation applications, including data collection and remote monitoring.

Our products have demonstrated their performance and quality across various sectors.

GMT provides products that deliver an exceptional price-performance ratio, enhancing customers' competitiveness within the industry.

GMT will consistently prioritize investment in innovation while delivering cost-effective, efficient, and rapid solutions.

Edition: July 2023, Istanbul

Thank you for selecting the GMTCNT GSR-2108T model MINI PLC WITH SCREEN device.

We are enhancing and refining the features of all our GMTCNT products, including our Mini PLC with Display device, in accordance with your preferences and requests.

CONTENTS

I. INTRODUCTION TO THE USER MANUAL 7

User Manual Guide Scope of the User Manual Appropriate Use and Safety Guidelines

II. GSR-2108T

Description 10
Advantages 10
General Framework 11

III. CHARACTERİSTİCS

General 13
Technical Specifications 13
Mechanical Specifications 14

IV. MOUNTING, WIRING, AND INSTALLATION 16

Considerations for Installation 17
Mounting the Device on a DIN Rail 17
Dismounting the Device from the DIN 18
Rail Mounting the Device on a Panel 20
Disassembling the Device from the Panel

ION Technology Group
www.iontg.com.au
1800 2 IONTG (1800 246684)

CONTENTS

Factors to Consider When Wiring. **20**
Device Installation. **21**
GSR-2108T Electrical Schematic. **22**

V. COMMUNICATION CALLS FOR COM1 AND COM2 APPARATUS **25**
5.1 GSR-COM1 & GSR-COM2 **25**
5.2 Communication Device GSR-COM2 **26**
5.3 Using GSR-COM1 **26**
5.4 Using GSR-COM2 **26**

VI. PROGRAMMING WITH GMTSUİTE
How to Access GMTSuite? **28**

VII. DEVICE SYSTEM CONFIGURATION MENU **30**
Navigation Keypads. **31**
Function Keypads. **32**
Accessing the System Main Menu. **32**
System Main Menu Input/Output (Int/Out.) **32**

ION Technology Group
www.iontg.com.au
1800 2 IONTG (1800 246684)

CONTENTS

How Can I Access I/O Information? 32
How can I load PRG, FRW, or BTL from a MEM (Memory) USB? 32
How can I reset non-volatile memory? 33
RTC (Clock) How Do I Configure the RTC? 34
How can I modify the brightness of the SCR (LCD & Keys) screen? 34
How can I verify the functionality of my 12-key keyboard? 35
How can I obtain SYS (System) status information? 35
PWD (Password) How Can I Generate a New Password? 36

VII. MAINTENANCE AND SUPPORT 38
Maintenance 40
Device Warranty Guidelines. 40
Support 41
User Evaluation 41

SECTION I

GMTCNT

GSR-2108T

1 INTRODUCTION TO THE USER MANUAL

- Upon purchasing the product, please inspect it thoroughly; verify that all components are present and undamaged. If you find any discrepancies, contact your seller promptly.

1.1 User Manual Guide

- **The user manual for the GSR-2108T mini PLC device with display comprises eight fundamental sections.**

❖ **Introduction to Mini PLC with Display,**
❖ **Introduction to GSR-2108T Mini PLC with Display**
❖ **General, Technical, and Mechanical Specifications**
❖ **Mounting, Wiring, and Installation**
❖ **COM1 and COM2 Communication Intermediate Devices,**
❖ **Programming with GMTSuite**
❖ **Device System Configuration Menu,**
❖ **Maintenance and Support Services**

1.2 Scope of the User Guide

- The information presented in this user manual is applicable to GSR series devices.

1.3 Appropriate Utilization and Security Requirements

Security definition:
In this manual, safety precautions are categorized as follows:

Danger Operations that fail to meet the requirements may lead to significant financial loss or may result in personal injuries.

Attention Operations that fail to meet requirements may lead to minor injuries or material losses.

During installation, commissioning, or maintenance, ensure adherence to the instructions outlined in the safety and precautions section of the manual.

- This user manual necessitates careful attention to ensure both personal safety and the safeguarding of this product and its connected equipment. Installation of the device should be conducted solely by qualified personnel. Such personnel are responsible for executing commissioning, wiring, grounding, and maintenance procedures in compliance with prevailing regulations and safety standards.
  designated as the individual authorized to do so.
- When connecting or disconnecting the device from the DIN rail or panel, ensure that all power is turned off. Establish the required ground connections.
- Automation and control devices should be installed to ensure protection against the risk of unintended operation. All connections to the control system must adhere to current safety standards.
- Fluctuations or variations in the supply voltage must not surpass the threshold values outlined in the technical specifications; otherwise, they may result in malfunctions and potentially hazardous situations.

- When an application is disrupted by fluctuations in the supply voltage, it is imperative to implement all necessary precautions to guarantee the application's continued proper functioning and to prevent any potentially hazardous situations, even momentarily.
- If you experience a technical issue, please refrain from tampering with the device and contact technical support at your earliest convenience.
- The device cannot be discarded; it must be returned to designated collection centers for electronic devices. It should be recycled or disposed of in a manner that does not harm the environment or human health.

Our company, along with the authorized dealer, cannot be held liable for any adverse consequences that may result from disregarding the aforementioned warnings.

SECTION II

GSR-2108T

2 GSR-2108T SCREEN Mini Programmable Logic Controller

2.1 Definition

- **The GSR-2108T Mini PLC with display is a compact programmable logic controller featuring an electronic display that manages a system through its inputs and outputs. It offers comprehensive control capabilities, including timing, counting, storage, and arithmetic operations. The inclusion of a screen significantly enhances user-friendliness. The device's lower and upper guiding keypads facilitate straightforward access to the system settings. Once you have developed a program tailored to your requirements in Ladder language, simply connect the device to your computer to initiate operation.**

- **The GSR-2108T Mini PLC with Display is both cost-effective and user-friendly, owing to its versatility and performance.**

2.2 Advantages

- The presence of a screen and keypad provides enhanced flexibility and usability.
- Given the compact design of the device dimensions, it can be effortlessly installed in small cabinets, panels, and boards housing the control system, should that be desired.
- Its compact design has considerably lowered the cabling expenses for systems.
- The straightforward installation process and the availability of a pre-configured system have facilitated its adoption across a broader range of sectors and institutions within the industrial domain.
- PLC inputs are primarily digital; however, they can also function as analog if required.
- It is equipped with advanced GMTSuite editor software, enabling the utilization of numerous features, including ladder logic, offline simulation, online simulation, and a graphic editor, among others.
- Thanks to its structured design, automation systems can be implemented with in-depth programming knowledge.

2.3 General Framework

- In Figure 1 below, the overall structure of the GSR-2108T Mini PLC with Display is illustrated in seven primary sections, numbered accordingly.

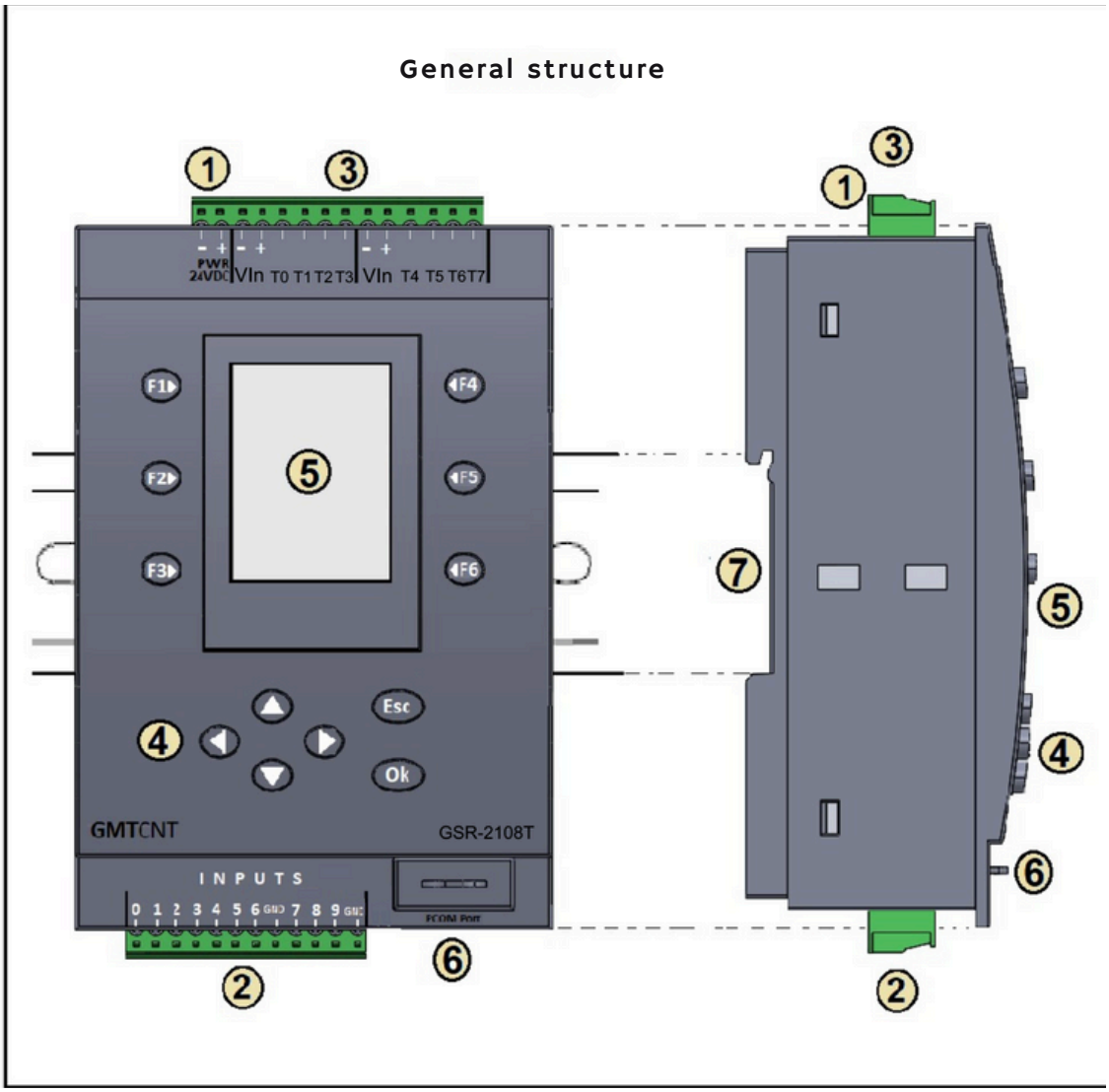

Figure 1: Structure of the Device

① **Power Input**
② **Digital / Analog Inputs**
③ **Outputs**
④ **Control Panel 12-Key Pad**
⑤ **TFT LCD Screen**
⑥ **Programming Socket Chamber**
⑦ **Mechanical Rail Adaptation Chamber**

ION Technology Group www.iontg.com.au 1800 2 IONTG (1800 246684)

SECTION III

GMTCNT

GSR-2108T

• 3 • FEATURES

• 3.1 • General Characteristics

- GSR-2108T Mini PLC featuring a display, designed for fundamental automatic control in industrial settings.
- engineered for applications.
- 24 VDC Power Supply
- 10 Channel Digital (PNP) / The first seven channels may be utilized as Analog Input (0-10V) (12-bit resolution) if preferred.
- 8 Transistor Output (0.5 A at 24 VDC),
- The final three channels from DIs may be HSC. An incremental encoder can be connected at this point. (Max 10kHz)
- The QP0 pulse and QP3 can serve as direction signals in digital outputs. Stepper and servo motors can be operated using Pulse/Direction, with a maximum frequency of 10 kHz.
- Integrated 1.8-inch 128 (RGB) x 160 TFT LCD color display,
- On the front panel of the programmable device designated for user interface inputs, there are six buttons located at the top and bottom.
- a total of twelve keypads,The functionality of the device's 12-key pad can be readily assessed.
- Compatible with Windows 7 and later versions, featuring an intuitive programming interface through "GMTSuite." usage ("GMTSuite" editor software) http://www.gmtcontrol.com/tr/yuklemeler/
- It is available for free download at yazilimlar.html.
- Delivering online input-output information through an LCD screen, including operation and usage.
- facilitates maintenance efficiency.
- The Real-Time Clock (RTC) is available.
- Reverse polarity protection is present. It features protection against short circuits and overloads.
- The device allows for the monitoring of analog values.
- The device features a color screen brightness adjustment, ranging from 100% to 10%.
- can be modified.
- Thanks to its compact dimensions (width 83 mm x length 113.7 mm x height 47 mm), it is suitable for a variety of
- can be effortlessly accommodated in confined spaces.
- A DIN rail or panel mounting feature is available.
- Options for Turkish and English languages are available.

• 3.2 • Technical Specifications

- Please be mindful of the voltage tolerances, network frequencies, and power consumption specifications outlined below.
- **Supply Voltage: 24 VDC (±10% tolerance),**
- **2.10 Channel Digital (PNP) / Analog Input (0-10 V),**
- **3.8 Channel Transistor Output (0.5A @ 24 V_C),**
- **4. The maximum counting speed for digital inputs is 2 kHz (50% duty cycle).**
- **5. Maximum program loop speed of 20 kHz,**
- **6.48 kB of program memory capacity,**
- **7. Support for decimal operations,**
- **8. Ladder Programming,**
- **9. Analog Inputs: Measurement range of 0 - 10 VDC (12-bit resolution), distortion voltage.**
- **max. 16 VDC,**
- **10. Analog Channel Sampling Interval: 100 ms,**
- **11. Power Consumption: Maximum 3W (The peak current during energization is 0.8 A),**
- **12. Operating Temperature: 0°C to 50°C,**
- **13. Storage Temperature: -10°C to 60°C (free from icing),**
- **14. Relative Humidity: 80% at 30°C, decreasing linearly to 50% at 50°C.**
- **15. EMC: EN 61000-4-2, EN 61000-4-4, EN 61000-4-5, EN 61000-4-2: Electromagnetic Compatibility, Electrostatic Discharge Immunity**

test; ± 8 kV air discharge, 4 kV contact discharge,
EN 61000-4-4: Electrical fast transient/surge immunity test; ±4 kV (supply and signal input/output terminals) 5 kHz, 100 kHz,
EN 61000-4-6: Surge immunity testing; 500 V.

17. **Relay Life:**
- Mechanical: 20,000,000 operations per minute (minimum 180 times per minute) Electrical (resistive load):

50,000 operations 250 VAC 5 A (minimum 6 cycles per minute)
100,000 operations at 30 VDC and 3 A.

3.3 Mechanical Properties

- Dimensions (width, length, height); GSR-2108T; 83 x 113.7 x 47 mm,
- GSR-COM1; 22 x 48 x 14 mm,
- GSR-COM2; 22 x 48 x 14 mm,
- Mounting Type: On 35 mm DIN rail
- On the panel (Window section that should be accessible to the panel)
- width: 80 mm x length: 111 mm (refer to section 4),
- Device panel input section: width 79 mm; length 110 mm.
- Weight; GSR-2108T; 215g GSR-COM1; 5g GSR-COM2; 5g
- Display: Internal color LCD screen, 1.8 inches.
- Mini TFT LCD 128 (RGB) x 160, Display outer frame dimensions: 34 x 47 x 2.4 mm, Display active area dimensions: 28.03 x 35.04 mm, Display resolution: 128 (RGB) x 160.
- 5. Terminal Tightening Torque: Maximum 0.56 N·m (refer to section 4)

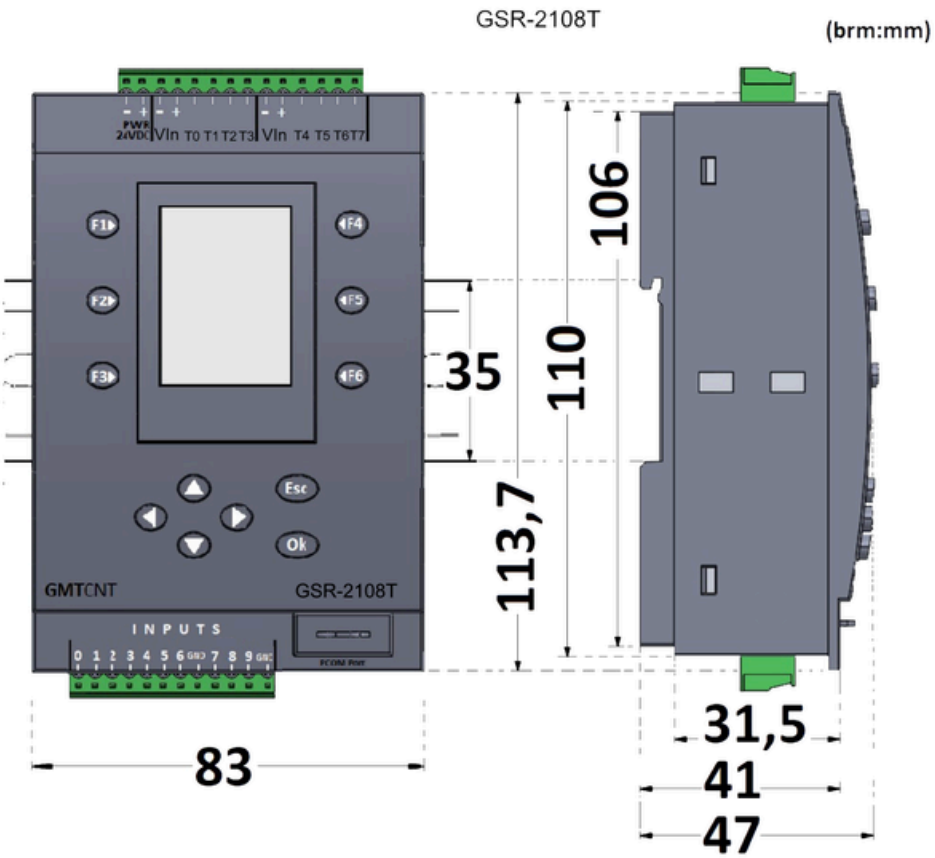

Figure 2: Mechanical Dimensions

ION Technology Group www.iontg.com.au 1800 2 IONTG (1800 246684)

SECTION IV

GSR-2108T

4 ASSEMBLY, WIRING, AND INSTALLATION

4.1 ASSEMBLY

- During the assembly and disassembly process;

Danger

Position the device on a non-flammable surface, such as metal, and ensure it is kept away from combustible materials. Failure to do so may result in a fire hazard.
Ensure that the device's mounting screws are securely tightened.

Attention

Avoid allowing cable fragments or screws to fall into the device through the upper and lower terminal inputs, as this may cause damage to the device.
Position the device in an area devoid of direct sunlight and vibrations.
mount on the surface.
When more than two controllers are installed in a cabinet, it is essential to consider the installation distances to facilitate proper heat circulation.

- **The GMTCNT GSR-2108T Mini PLC with display is designed for DIN rail installation within a panel, as well as for direct panel mounting. The device can be affixed to a 35 mm wide DIN EN 50022 compliant rail (automatic rail). The device measures 83 mm in width. This section outlines the procedure for mounting and dismounting the device.**

4.1.1 Factors to Consider During Installation

- Always disconnect the power supply when installing or removing the device. Take appropriate precautions to prevent unintended relay activation. Ensure proper grounding and short circuit connections are established.
- Install the device within the electrical panel, ensuring it is shielded from rain and direct sunlight.
- Safeguard against flammable and combustible substances and materials.
- Securely attach the device to the interior rail or panel at the connection points, ensuring adequate air circulation and preventing obstruction of the air ducts.
- Install the device to ensure protection against adverse environmental conditions, including humidity, vibration, pollution, and extreme temperatures.
- Do not use the device beyond the technical specifications and environmental conditions outlined in section 3.

4.1.2 Installing the Device on DIN Rail

- To mount the device on a DIN rail, as illustrated in Figure 3;

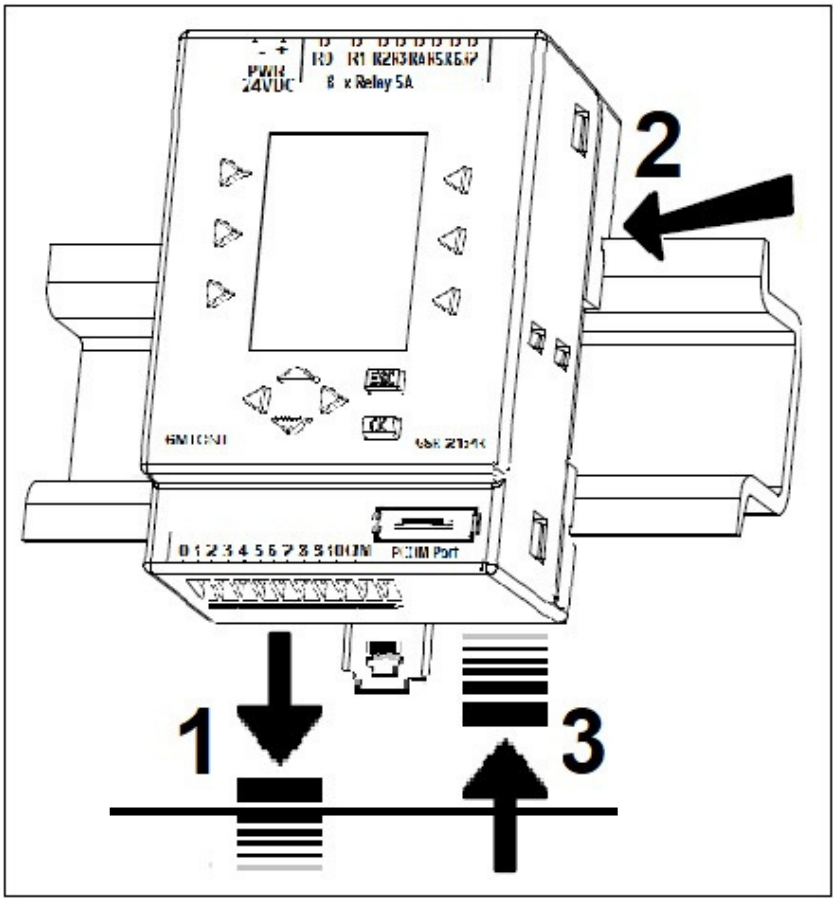

Figure 3: GSR-2108T DIN Rail Mounting

- **The fixing rail clip, denoted as number 1, is pulled downward and then left in the final stage. This action opens the area where the DIN rail will be positioned.**
- **At the location marked by number 2, the slotted hook socket on the rear of the device is positioned on the DIN rail.**
  The device is held by hand, gently pushed, and positioned on the DIN rail.
- **The stabilizer rail clip, denoted as number 3, is progressively elevated, the device Attaches securely to DIN rail.**

4.1.3 Removal of the Device from the DIN Rail

- When disassembling the device, first disconnect the power supply.
- The stabilizer rail clip marked with the number 1 is gradually pulled downward.
- The fixed device has been released.
  At the location marked by number 2, the released device is seized and elevated.
  is accepted.

4.1.4 Installing the Device on the Panel

- When installing the device onto the panel, it is essential to prioritize the window section's opening. To ensure a precise fit of the device on the panel, as illustrated in Figure 4 below, the window section must measure 80 x 111 mm. The portion of the device that rests on the panel measures 79 x 110 mm, as depicted in Figure 4.

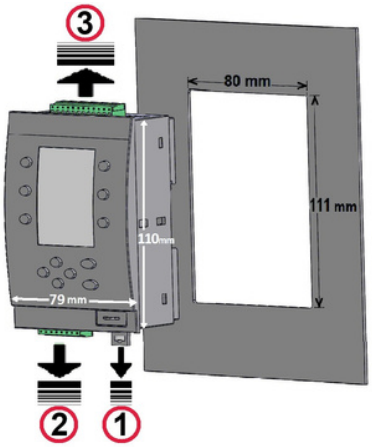

Figure - 4 GSR-2108T Panel Mounting

The device is pre-installed on the rear, as illustrated in Figures 4 and 5.

1 by number The rail clip depicted has been unscrewed and detached from the device.

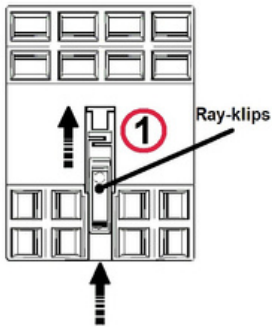

Figure 5: Rear view of the Ray-clip device.

- The 12- and 13-way input/output green terminals, as numbered 2 3 in Figure 4, are factory-mounted on the top and bottom surfaces of the device and are subsequently removed from it.

- The device is positioned vertically on the panel, as illustrated in Figure 6 below.

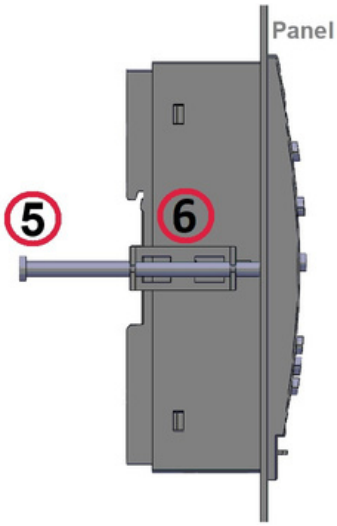

Figure 6: Device Profile

- The metal securing bracket, shown as number 6 in Figure 7, is attached to the dual metal slot on the side surfaces of the device, marked as number 4, so that the clips fit into the slots.
- These two components have been installed. The metal apparatus is securely fitted.

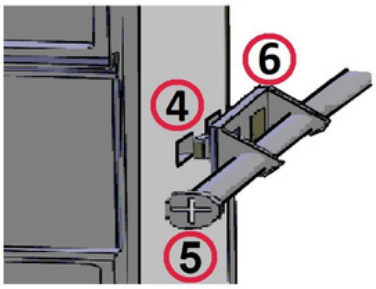

Figure 7: Entry Point of the Metal Apparatus

ION Technology Group www.iontg.com.au 1800 2 IONTG (1800 246684)

- **The M4 metal YSB screws, 60 mm in length and shown as number ⑤ are inserted and tightened through the dual holes in the handles of the double-pronged metal brackets marked as number ⑥ in Figures 6 & 7, securing the device to the panel with the help of a screwdriver.**

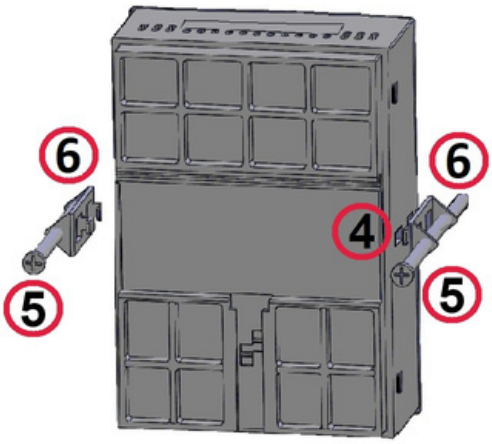

Figure 8: Securing the device to the panel

- **Double-claw metal brackets (x2) and M4 YSB 60mm screws on the sides, as illustrated in Figures 8 and 9.**
(x2) is displayed.

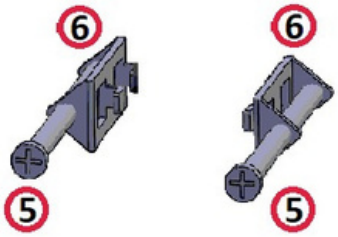

Figure - 9 Double Claw Apparatus M4 YSB 60 mm Screw

- The device locks onto the panel as shown in Figure 10. Below, the front and rear views of the device after panel mounting are displayed. Finally, the 12-pin and 13-pin input/output terminals, labeled as numbers ② and ③, are attached. After powering the device, the PLC program is loaded and started.

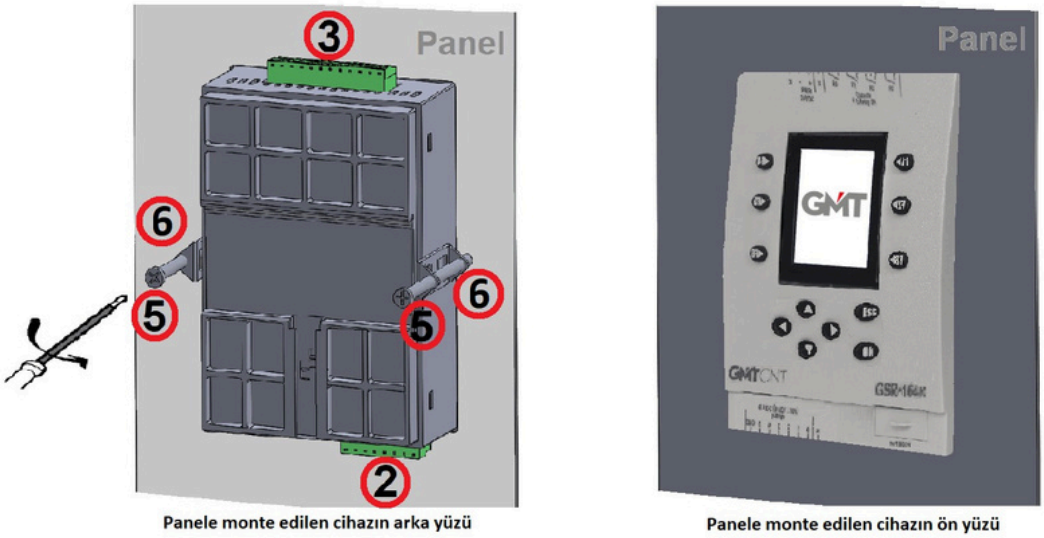

Figure - 10 Front and back faces post-assembly

①Rail-clip number
②Input terminal 12-pin 3.5 mm
③Output terminal 13-pin 3.5 mm
④Double-claw metal fixture socket
⑤60mm M4 metal YSB screw
⑥Double-claw metal fixing fixture

ION Technology Group www.iontg.com.au 1800 2 IONTG (1800 246684)

4.1.5 Disassembling the Device from the Panel

- Before detaching the device from the panel, the power must be turned off.
- The two 60 mm M4 metal YSB screws, marked as number ⑤ , are removed by turning them with a screwdriver.
- The two double-pronged metal securing brackets, marked as number ⑥ are pulled out from their slots. The device, now released, is then gripped and removed by pulling it from the front of the panel.

4.2 WIRING

- During the cable connection process;

Danger

Attention

- The device must be installed by qualified technical personnel. Failure to do so may result in a risk of electric shock.
- Ensure that the power is turned off prior to making any connections, as failure to do so may pose a risk of electric shock.
- Ensure that the ground connection is properly established. Failure to do so may pose a risk of electric shock.
- Please adhere to the wiring instructions and ensure the cables are connected properly. Failure to do so may result in damage to the device.
- Ensure compliance with EMC and safety standards. Adhere to the instructions in the manual prior to wiring. Failure to do so may result in the risk of injury or electric shock.
- It must be utilized with a shielded cable, and the cable should be properly grounded.

4.2.1 Factors to Consider When Wiring

- The cable cross-section appropriate for the current being drawn must be utilized. Cable connections may be established with cables having a maximum cross-section of 1.5 mm². The range of cable cross-sections that can be accommodated within the device terminals is from 0.5 mm² (20 AWG) to 1.5 mm² (16 AWG). The minimum permissible cross-section is specified in Table 1 below.
  Cable cross-section values are provided.

Cable gauge	PSU 24VDC	Min :	0.37mm² (AWG 21)
	Inputs / Outputs	Digital Inp	0.29mm² (AWG 22) – 0.59mm² (AWG 20)
		Digital Outs.	0.033mm² (AWG 32) – 0.066mm² (AWG 29)
		Analog Input	0.0035mm² (AWG 37)
		Analog Output	0.0035mm² (AWG 37)

Table - 1 Cable Cross-Section

- Terminals must not be excessively tightened. The maximum rotational force permissible is 0.56 Nm. The maximum torque applicable for input/output and supply is detailed in Table 2 below.

ION Technology Group www.iontg.com.au 1800 2 IONTG (1800 246684)

Terminal screw tightening torque	PSU 24VDC / External	0.45 Nm (4lb-in)
	Input / Outputs	0.56 Nm (5lb-in)

Table - 2 Torque Specifications for Screw Tightening

- The wiring should be maintained as short as feasible; if extended cable usage is necessary, care should be taken to utilize shielded cable. The neutral connection should be routed alongside the phase or signal cable (live end).
- AC cables, high-voltage DC cables, and low-voltage signal cables are maintained separately from one another.
- It is essential to ensure that the cables possess adequate mechanical strength.
- Proper overvoltage protection should be installed on lines that could be impacted by lightning.
- Devices and signal/communication cables must be positioned away from sources of electrical noise and power lines. Shielded and twisted signal and communication cables should be employed and grounded from the shielded device side.
- A proper fuse is employed at the mains supply input of the device. An appropriate cable is utilized for mains connections.

4.3 SETUP

4.3.1 Device Setup

- During the device installation;
- Avoid using appliances that are flooded, damaged, or missing components. Failure to do so may result in potential hazards.
- Utilize insulation. Failing to do so may pose a risk of electric shock.

Attention

- Exercise caution to avoid damaging the device during transit.
- A controller that is defective or has incomplete components.
- Refrain from using it, as it may pose a risk of injury.
- Do not handle electronic parts and components; otherwise,
- otherwise, it may generate static electricity.
- Prior to usage and installation, thoroughly and attentively review the device's user manual.
- Please heed the warnings outlined in these manuals. Ensure that the prevailing and requisite standards are adhered to during the installation, mounting, and wiring of the device.
- Local and national regulations must be considered in the installation and operation of the devices.

4.3.2 GSR-2108T Connection Schematic

- Digital or analog inputs must be connected in accordance with the usage specified in the connection diagram presented in Figure 11 below. A 12-pin (3.5mm/12P) terminal should be designated for input, while a 13-pin (3.5mm/13P) terminal should be allocated for output.

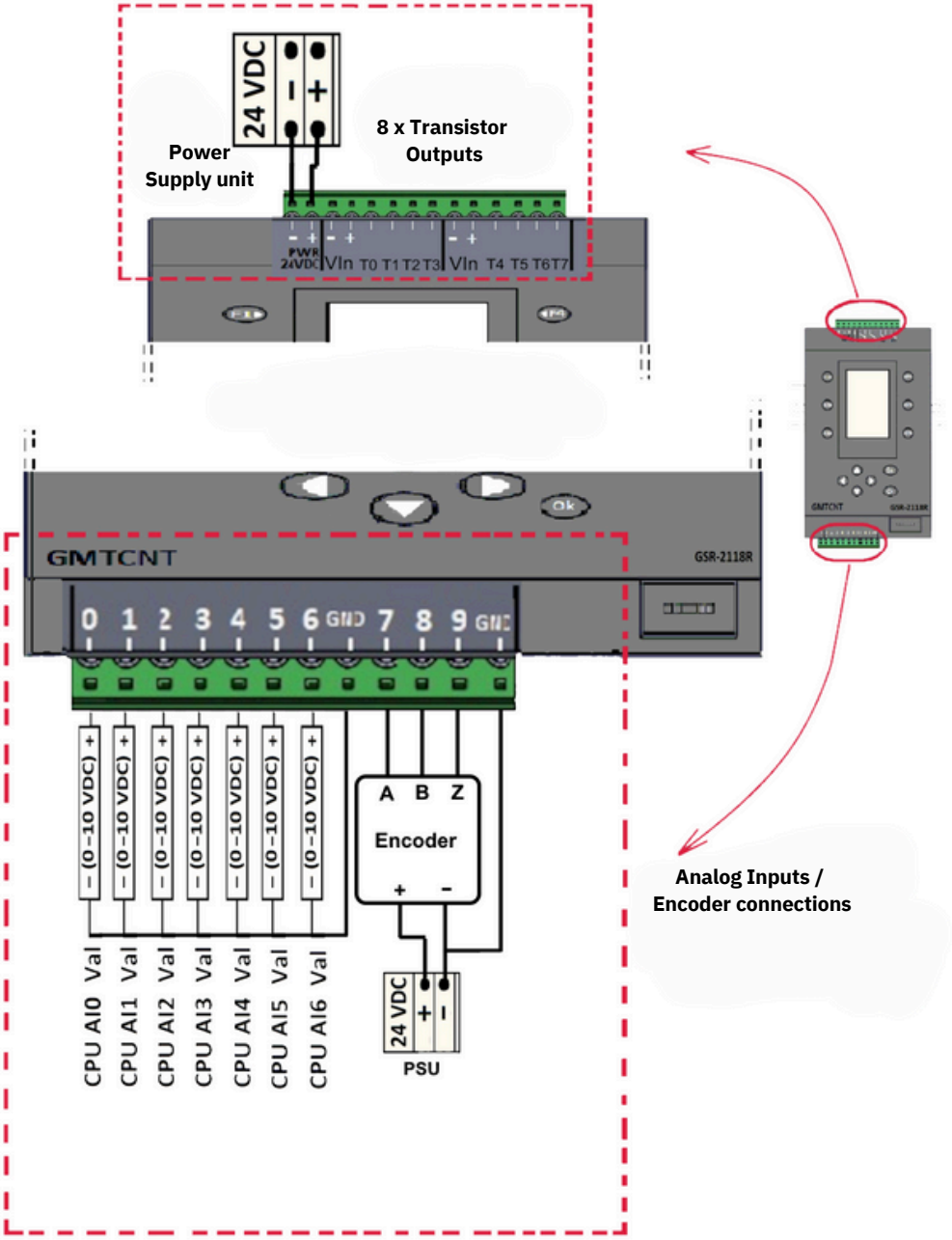

Figure - 11a Analog Input Connection Schematic

ION Technology Group www.iontg.com.au 1800 2 IONTG (1800 246684)

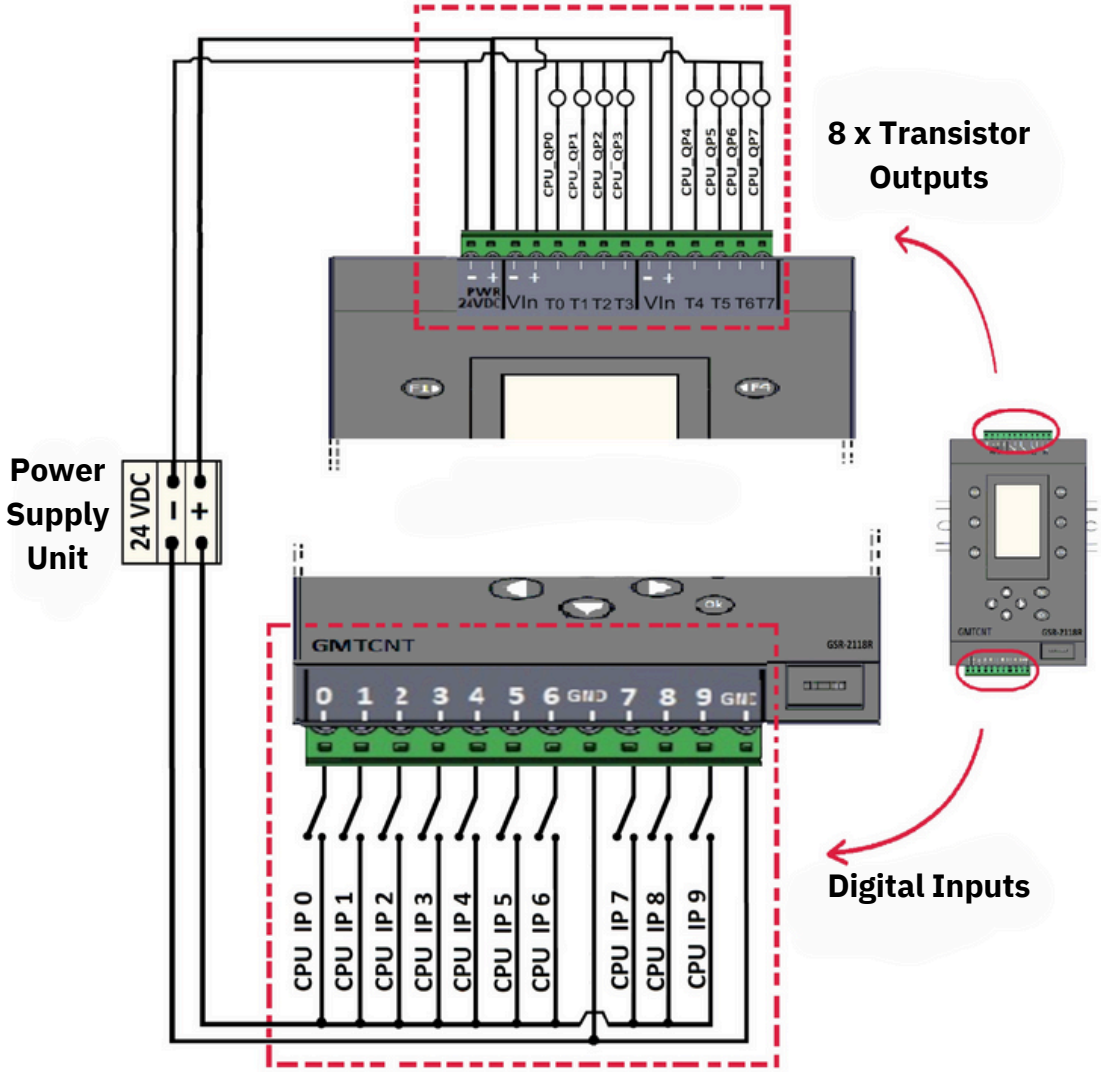

Figure - 11b Digital Input Connectivity Diagram

- Note: Analog and digital connections may be utilized concurrently and in any sequence.

SECTION V

GMTCNT

GSR-2108T

5 COM1 and COM2 Communication Intermediate Devices

5.1 GSR-COM1 and GSR-COM2

The GSR-2108T mini PLC device featuring a display can be programmed in two distinct methods.

Utilizing the GSR-COM1 communication adapter, the device connects to a USB 2.0 A Male - Mini B. Connect the computer using a cable and launch the program from the GMTSuite editor.
Using the GSR-COM2 communication intermediary device, the program is transferred into the

device via a USB flash drive containing the PLC program.

5.2 GSR-COM1 Communication Intermediate Apparatus

- **GSR-COM1 is a mini USB interface designed for the GSR-2108T Display mini PLC, as illustrated in Figure 12 below. It is a program-loading communication intermediary that facilitates connectivity. It enables connection to your PC using a USB 2.0 A Male to Mini B cable.**

Figure - 12 GSR-COM1 Communication Intermediate Device

5.3 GSR-COM2 Communication Intermediate Unit

- GSR-COM2 is an intermediate device for program loading that facilitates a USB connection to the GSR-218R Display mini PLC, as illustrated in Figure 13 below. Programs can be effortlessly loaded onto the Display mini PLC using a USB flash drive. The USB data format must be FAT32.

Figure - 13 GSR-COM2 Communication Intermediate Apparatus

USB Flash memory

ION Technology Group www.iontg.com.au 1800 2 IONTG (1800 246684)

5.4 How can I utilize GSR-COM1?

- The USB input cover on the PCOM communication port of the device can be removed by grasping it by the handle or utilizing a screwdriver.

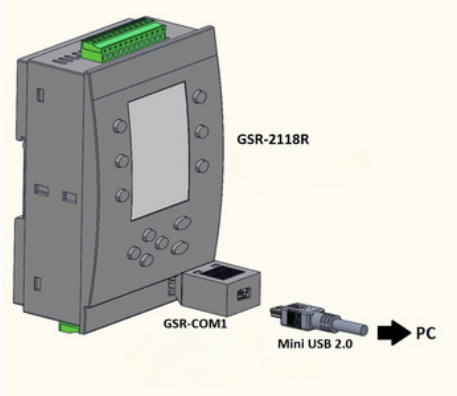

Figure 14: Utilizing GSR-COM1

- **As illustrated in Figure 14, the GSR-COM1 communication intermediary device is inserted into the PCOM Port socket, with the tabs on the lateral surfaces engaging the socket.**
- Connect the USB 2.0 A-Male to Mini-B cable to the mini USB input of the GSR-COM1 USB communication adapter.
- The other end of the cable, featuring a USB 2.0 A-Male connector, is attached to the computer.
- Upon powering on the device, the desired application is executed by downloading the GMTSuite PLC Editor program from the website www.gmtcontrol.com, navigating to Downloads > Software > Programs designed in ladder language.

5.5 How can I utilize GSR-COM2?

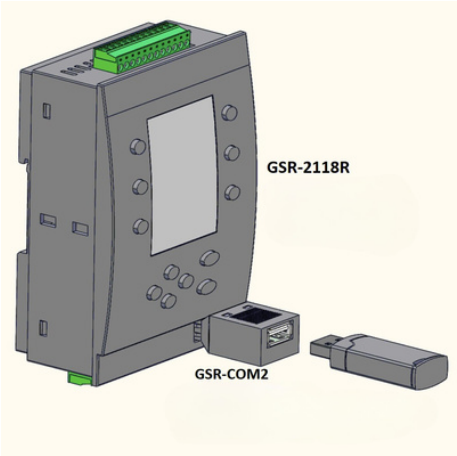

Figure 15: Utilization of GSR-COM2

- The USB input cover on the PCOM Port of the device can be removed by grasping it by the handle or utilizing a screwdriver.
- As illustrated in Figure 15, the GSR-COM2 communication intermediate device is inserted into the PCOM Port socket, with the tabs on the lateral surfaces engaging the socket.
- Upon powering on the device, a flash memory containing the program is inserted into the USB port of GSR-COM2.
- The pertinent project has been previously opened in the GMTSuite editor and is prepared on a USB flash drive.
- The main menu of the device is accessed, from which the following buttons are pressed: MEM (Memory) > DWN (USB>PLC) > PRG (Program) to save the program and load the desired application.

ION Technology Group www.iontg.com.au 1800 2 IONTG (1800 246684)

SECTION VI

GMTCNT

GSR-2108T

6 PROGRAMMING with GMTSuite

6.1 How Can I Access GMTSuite?

- By accessing our company's website at www.gmtcontrol.com on your computer through the internet,
  Free access granted Downloads > Software > GMTSuite PLC Editor
  Download the program. Upon completing the installation and cable connections outlined in Section 4, power on your device. You can implement the PLC program you have developed using the communication intermediary devices supplied by our company.

ION Technology Group www.iontg.com.au 1800 2 IONTG (1800 246684)

SECTION VII

GSR-2108T

7 DEVICE SYSTEM CONFIGURATION MENU

- The device features a total of 12 keypads, 6 of which are designated for programming functions. The usage and purposes of this 12-keypad configuration are detailed below.

7.1 The lower 6-button keypad Functionality

- **The lower-6 keypad is illustrated in Figure 16. It serves general routing and transition functions.**

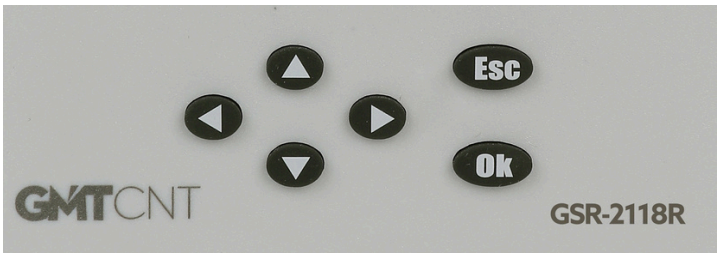

Figure 16: Lower Six-Key Pad

- The description of each key on the Alt-6 keypad is presented below.

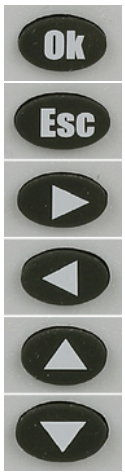

It serves as a universal selection and approval button.

The exit button is utilized for exiting without saving any numerical modifications made.

Utilized to navigate to the subsequent variable in the menu.

Utilized to navigate back to a prior variable in the menu.

Utilized to augment the parameter value within the menu.

Utilized to reduce the parameter value in the menu.

7.2 Utilizing the Upper-Hexagon Keypad

Figure 17 illustrates the upper hexagon keypad. "F1▶" "F2▶" "F3▶" "◀F4" "◀F5" "◀F6" keys, for navigating between menus and assigning tasks within the program It is utilized to. Transitions to the system's main menu and other menus are elaborated upon in detail below.

Figure 17: Upper-6 Keypad

ION Technology Group www.iontg.com.au 1800 2 IONTG (1800 246684)

7.3 Accessing the System Main Menu

After the device installation setup and cable connection are completed (see section 4), power is supplied to the device for the first time.
Press and hold the "OK" button on the device for 3 seconds. The message “GSR Settings Password 00000” will appear on the color display.
To enter the desired password, press and hold the "OK" button again to activate the 5-digit "Password" entry field.
The default password "00001" is entered by pressing the "Up" button once. Finally, confirm by pressing the "OK" button to access the main menu.

7.3.1 System Main Menu

- In the system's main menu, the color display depicted in Figure 18 is visible. This screen serves as the primary menu of the system.

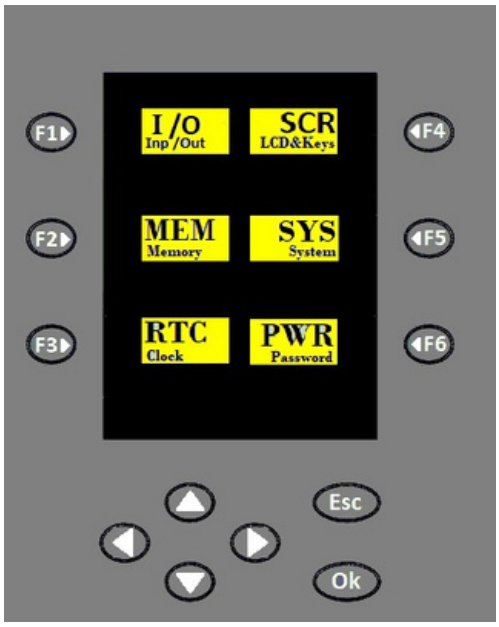

Figure 18: Main Menu Screen of the System

“F1►” I/O (Input/Output),

“F2►” MEM (Memory),

“F3►” RTC (Clock) ,

“◄F4” SCR (LCD & Keys),

“◄F5”SYS (System)

“◄F6” PWD (Password)

- **Esc To exit the main menu of the system, simply press the button on the device.**

7.3.2 I/O (Input/Output)

- In the main menu, when the F1 button is pressed on the I/O (Inp/Out) line,

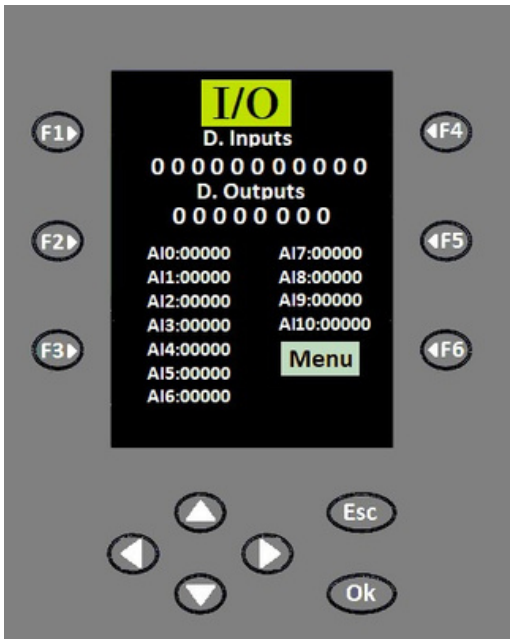

Figure - 19 I/O (Input/Output)

- As illustrated in Figure 19, the color LCD screen displays 11 channels of digital input, 8 channels of digital output, and 11 channels of analog input (AI0, AI1, AI2, AI3, AI4, AI5, AI6, AI7, AI8, AI9, and AI10).
- To return to the main menu, simply press the F6 button aligned with the “Menu” text on the screen.

7. 3. 2. 1 How Can I Access I/O Information?

By selecting the key at the I/O (Input/Output) level on the system's main menu screen, the 11-channel digital input/8-channel digital output values or the 11-channel analog input values of the operating system can be monitored in real-time on the TFT LCD color display.

7.3.3 MEM (Memory)

- In the main menu, when the F2 button is pressed on the MEM (Memory) line,

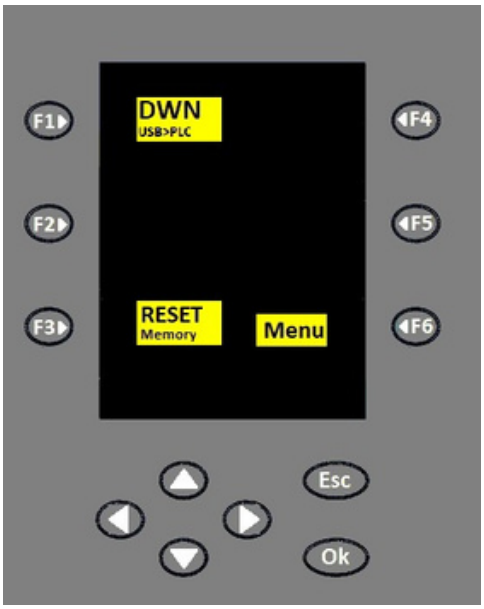

Figure - 20 MEM (Memory)

On the color display, as shown in Figure 20, "DWN" (USB>PLC) appears aligned with F1, "RESET" (Memory) with F3, and “Menu” with F6. From the screen shown in Figure 20, pressing the F1 button next to "DWN" allows the program to be loaded, while pressing the button next to F3 "RESET" clears the memory. To return to the main menu, press the F6 button aligned with the “Menu” text on the screen.

7.3.3.1 How Can I Load a PRG, FRW, or BTL from USB?

From the main menu screen, pressing the F2 button on the MEM (Memory) line opens the DWN (Download) menu screen, as seen in Figure 21. Here, pressing the F1 button aligned with DWN (USB>PLC) accesses the DWN screen where the program download will occur. Using the GSR-COM2 communication adapter and a USB flash drive, the ready PLC program (PRG), firmware (FRW), or bootloader (BTL) is loaded onto the device. Once the process is complete, the "USB: xx!" and "FILES: xx!" messages change to "USB: ok" and "FILES: ok."

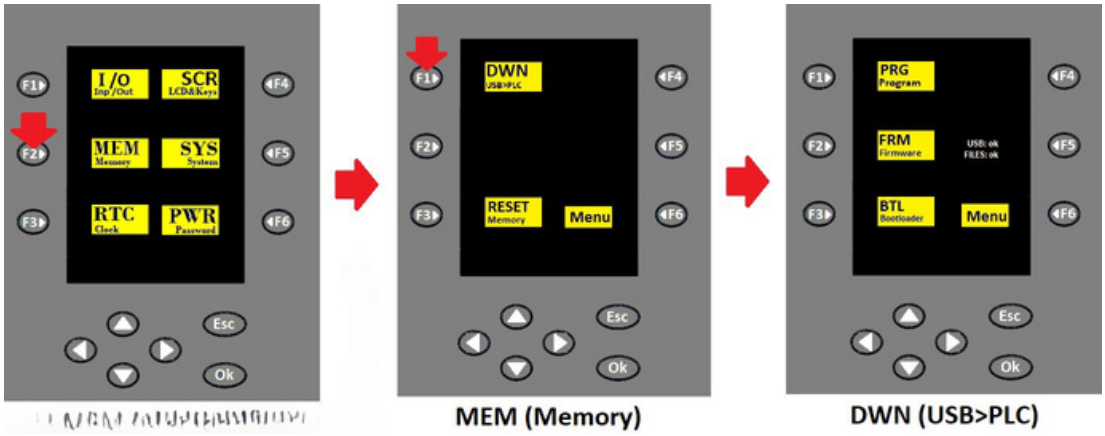

Figure - 21 "Download" Interface

- To return to the main menu, simply press the F6 button next to the “Menu” text on the screen twice.

7.3.3.2 How Can I Reset Permanent Memory?

From the main menu screen, pressing the F2 button on the MEM (Memory) line opens the MEM screen shown in Figure 22. Here, pressing the F3 button aligned with RESET (Memory) in the lower left corner of the screen clears all values in the permanent memory.

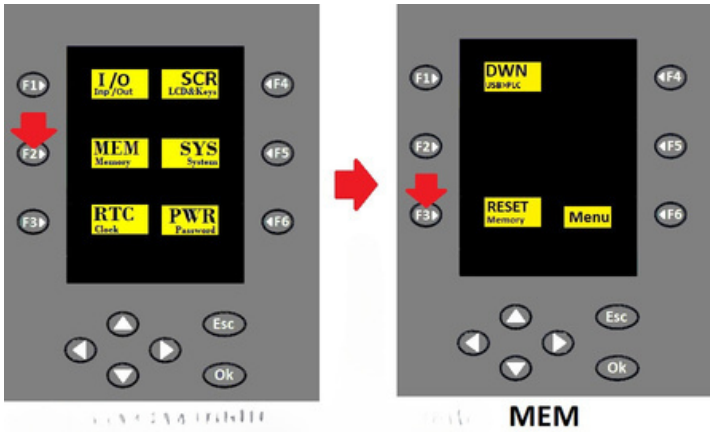

Figure 22: Resetting the Permanent Memory

To return to the main menu, simply press the F6 button next to the “Menu” text on the screen.

ION Technology Group www.iontg.com.au 1800 2 IONTG (1800 246684)

7.3.4 RTC (Real-Time Clock)

- In the main menu, when the F3 button is pressed on the RTC (Clock) line,

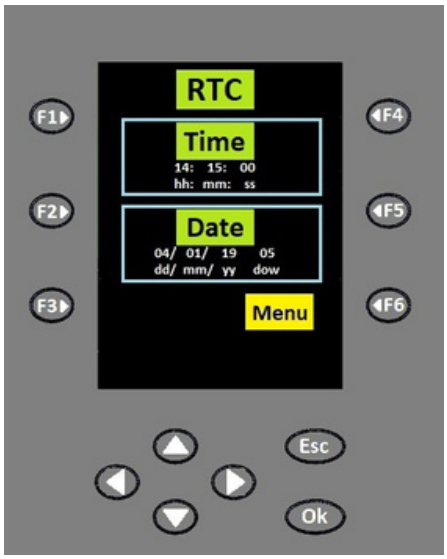

Figure - 23 Real-Time Clock (RTC)

On the color display, as shown in Figure 23, you can see the RTC (Real-Time Clock), the time and date, the day of the week, and the Menu option. To return to the main menu, simply press the button next to the “Menu” text on the screen.

7.3.4.1 How Do I Configure RTC?

By selecting the F3 button corresponding to the RTC (Clock) from the system's main menu screen, Figure Real-time clock in 24-hour format "Time" (hh:hour / mm:minute / ss:second) and "Date" (dd: Day / mm: Month / yy: Year / dow: Day of the week values can be adjusted using the directional keys.

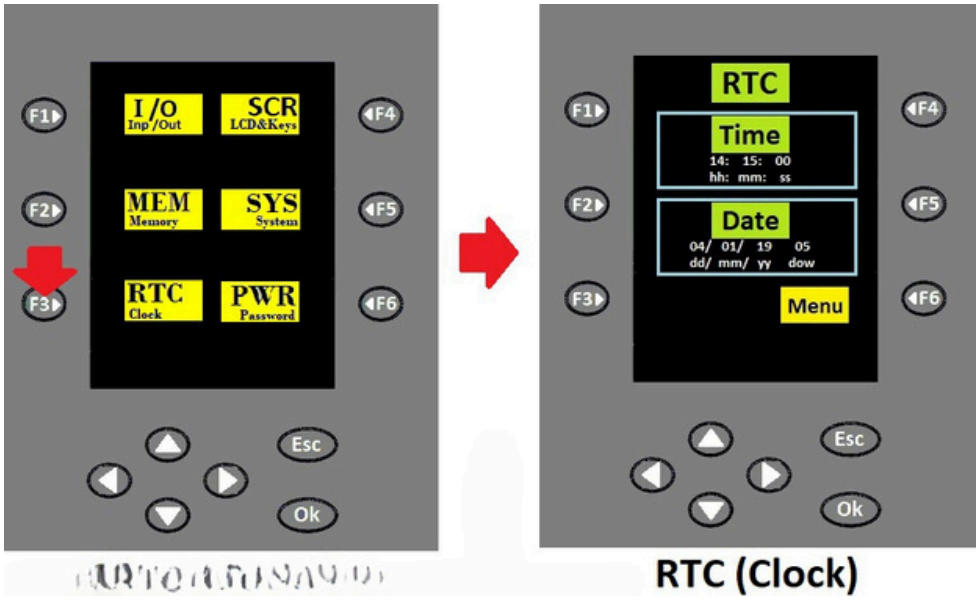

The parameters to be adjusted are activated by pressing the "OK" button. For each activated parameter, current values are set using the "Up" or "Down" buttons. The assigned values are confirmed by pressing the "OK" button again. To navigate to other parameters, the "Left" and "Right" directional buttons are used.

ION Technology Group www.iontg.com.au 1800 2 IONTG (1800 246684)

7.3.5 SCR (LCD and Keys)

- In the main menu, when the F4 button is pressed on the SCR (LCD & Keys) line,

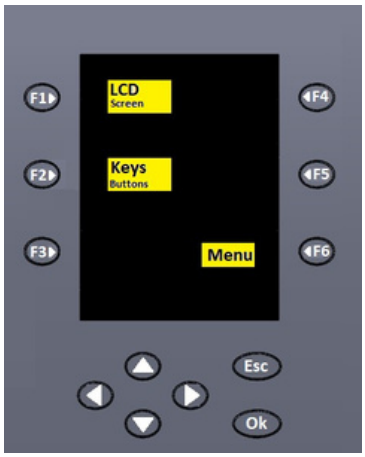

Figure - 25 SCR (LCD and Keys)

- On the color display, as shown in Figure 25, "LCD (Screen)" appears aligned with F1,
- "Keys (Buttons)" with F2,
- “Menu” with F6.

Pressing the F1 button next to "LCD" allows for brightness adjustment. Pressing the F2 button next to "Keys" brings up the "Key code 000" screen, where the 12-button keypad can be tested for proper functionality.

7.3.5.1 How Can I Modify Screen Brightness?

From the main menu screen, pressing the F4 button on the SCR (LCD & Keys) line opens the SCR screen shown in Figure 26. From here, pressing the F1 button next to LCD allows the brightness of the TFT LCD color screen to be adjusted and tested incrementally.

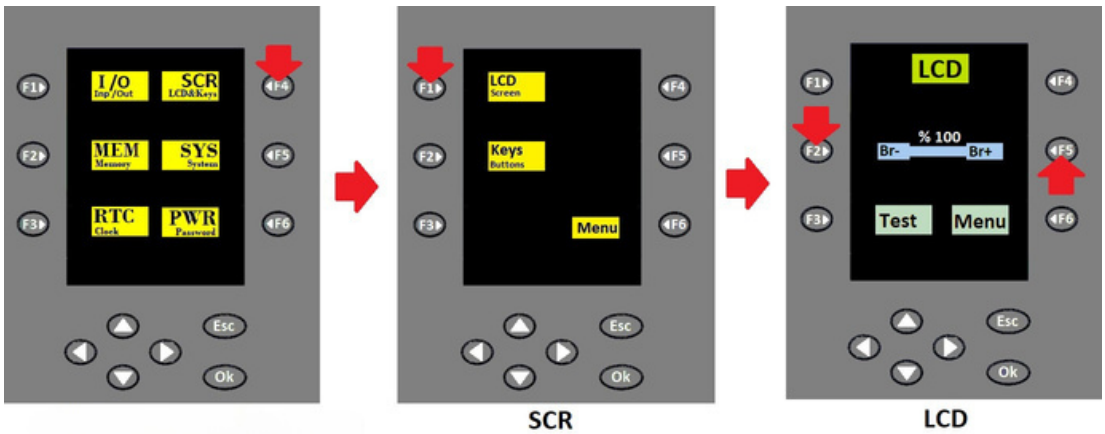

Figure 26: Brightness Adjustment

- • Here, you can incrementally adjust the brightness from 100% to 10% using the “Br-” and “Br+” controls. Press the button adjacent to “Br+” to increase the brightness by 10, and press the button next to “Br-” to decrease it.
- • The brightness adjusted using the button adjacent to the "Test" text is noted, and the same button is pressed once more.
- • Pressing it navigates back to the previous brightness settings menu.
  - To navigate back to the system's main menu, please click on the screen adjacent to the "Menu" text F6

How can I verify the functionality of the 7.3.5.212 keypad?

The SCR screen is accessed by selecting the key from the system's main menu, while the "Key code 000" screen is reached by pressing the key adjacent to "Keys" (Buttons). This section tests the proper functionality of the 12-key pad. For instance, when the key is pressed, the display should indicate "Key code 001"; similarly, pressing the key should result in "Key code 002." If an alternative value appears, it signifies a malfunction. The same principle applies to the other keys.

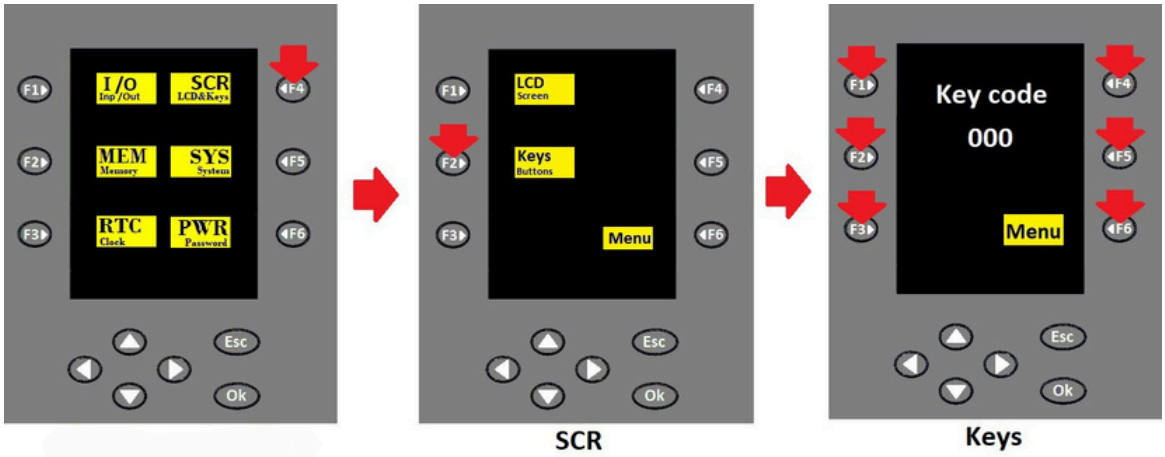

Figure 27: Keypad Operation Test

7.3.6 System

- In the main menu, when the F5 button is pressed on the SYS (System) line,

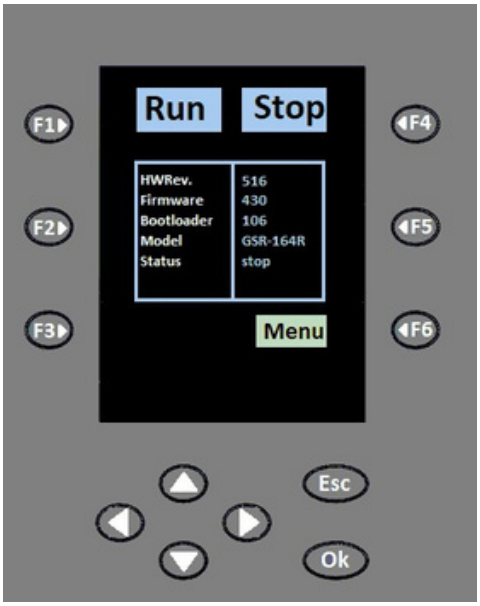

Figure - 28 SYS (System)

- System information, including HWRev, Firmware, Bootloader, Model, and Status, is presented in a table on the color screen, as illustrated in Figure 28.

ION Technology Group www.iontg.com.au 1800 2 IONTG (1800 246684)

7.3.6.1 How Can I Obtain Status Information?

- By pressing the F5 button on the SYS (System) line, information on system status, model, bootloader, firmware, and hardware revision can be obtained.

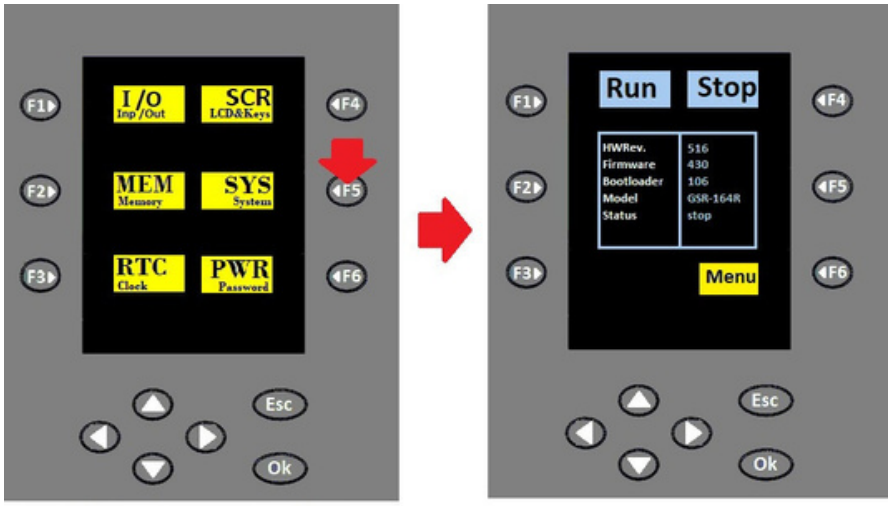

Figure 29: Status Information

System information, including HWRev, Firmware, Bootloader, Model, and Status, is presented in a table on the color screen, as illustrated in Figure 29 above. Upon receiving the Run or Stop status information of the system, the "Run" command is initiated by pressing the designated key, or the "Stop" command is executed by pressing the corresponding key. When both keys are pressed simultaneously, the screen displays the message "GSR Settings Password 00000." In this scenario, the password should be entered in the field labeled "Password," and the operation may proceed. To navigate back to the system's main menu, please click on the screen adjacent to the "Menu" text. Simply press the button.

7.3.7 PWD (Password)

- In the main menu, when the F6 button is pressed on the PWD (Password) line,

Figure - 30 PWD (Password)

- **The text "PASSWORD SET 00000," as illustrated in Figure 30, is displayed.**

ION Technology Group www.iontg.com.au 1800 2 IONTG (1800 246684)

7.3.7.1 How Can I Establish a New Password?

From the main menu screen, pressing the F6 button on the PWD (Password) line allows the device password to be updated.

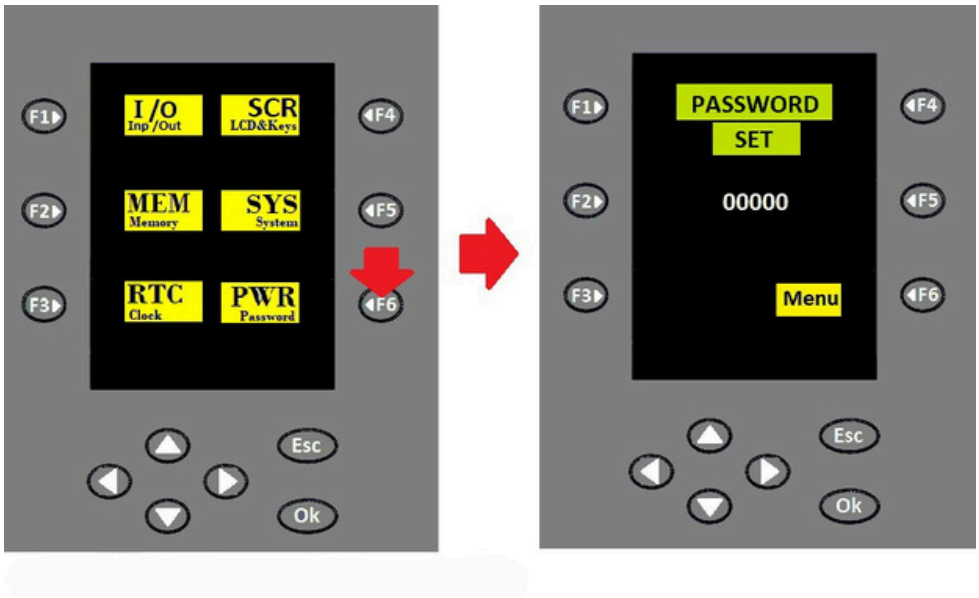

Figure 31: Creating a New Password

When the F6 button on the PWD (Password) line is pressed, the message “PASSWORD SET 00000” appears, as shown in Figure 31. The password for the mini PLC with a display can be set, updated, or changed on this screen. Pressing the "OK" button activates the “00000” password entry field. A new password can be entered using the "Up" and "Down" navigation buttons, and the entered password is confirmed by pressing "OK" again. The password must be a maximum of 5 digits. Access to the menus will not be granted if the correct password is not entered.

ION Technology Group www.iontg.com.au 1800 2 IONTG (1800 246684)

SECTION VIII

GMT CNT

GSR-2108T

8 CARE AND SUPPORT

- During maintenance.

Danger

Do not attempt to repair or maintain the device while it is energized, as this may pose a risk of electric shock.
Device maintenance and repair should be conducted by qualified technical personnel. Failure to do so may result in injury and damage to the device.
If the device is replaced, the parameter settings must be re-entered.
Once the power is disconnected, all connections must be reestablished.

8.1 Care

Environmental factors such as temperature, humidity, dust, and vibration will cause components inside the device to age. This may lead to device malfunction or a reduction in its lifespan. Therefore, routine and periodic maintenance of the device is necessary.

Maintenance should be performed in the following situations:
1) If there is an abnormal noise during device operation,
2) If there is vibration during device operation,
3) If there are changes in the environmental conditions of the device's installation location,
4) If the device is overheated.

Routine Cleaning:
1) The device should always be kept clean.
2) Dust on the device should be removed, especially preventing metal dust from entering the device.

Periodic Inspection:
Steps for periodic inspection:
1) Check and keep the ventilation channels clean.
2) Check for any missing panel mounting screws.
3) Inspect for any arcing in the cable connections.

8.2 Device Warranty Guidelines

GMT Endustriyel Elektronik San. ve Tic. Ltd. Şti. offers a two-year warranty from the date of purchase for damages arising from usage conditions outlined in the user manual. Repairs for malfunctions occurring beyond this period will incur a fee.
Under the following conditions during the warranty period, the repair of the device will incur a charge:
a) Damages arising from usage beyond the conditions outlined in the user manual, b) Damages caused by fire, flooding, and fluctuations in mains voltage.

ION Technology Group www.iontg.com.au 1800 2 IONTG (1800 246684)

8.3 Support

- To swiftly and effortlessly locate answers to your inquiries regarding mini PLCs with displays, please visit our website at http://forum.gmtcontrol.com.

Technical Support Center Contact Information:
Phone: +90 (216) 668 00 06, GSM: +90 (534) 363 75 33, Fax: +90 (216) 668 00 08, E-mail: gmt@gmtcontrol.com, Address: Çubuklu Mh. Boğaziçi St. No: 6/B, Beykoz 34805, Istanbul, Turkey.

8.4 User Evaluation

Dear Valued Customer,

Reproduction or transmission of this user manual without the consent of company authorities is prohibited. Individuals who violate this provision may be held liable for any resulting damages. Specifically, all rights are reserved in the event of the emergence of patent rights or consumer product models or designs.
This user manual has been verified for compatibility with both hardware and software.
However, there may be shortcomings. The information in this user manual is routinely evaluated, and necessary modifications are implemented for subsequent editions. Your suggestions can enhance the development of a user-friendly manual. We welcome your contributions in this regard.