SinCos ROTARY ENCODER

"59.6 mm Body Diameter, 1:10 Tapered Shaft"

ARF S 58



GENERAL FEATURES

- Magnetic or optical measurement
- 59.6 mm body diameter
- 1:10 tapered shaft
- Incremental 2048 pulse resolution
- Absolute Sin/Cos output signals
- 3000 RPM operating speed
- High signal quality
- Robust structure, long service life
- Easy installation

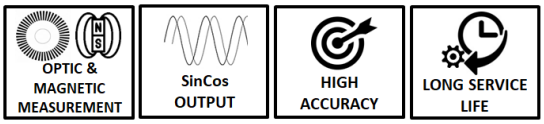

ARF S 58 series SinCos rotary encoders measure with magnetic and optical principle. They offer 2048 pulse resolution per revolution. They are particularly suitable for applications in the field of elevator and drive technology. Thanks to their high signal quality, they work stably without being affected by noise.

APPLICATION FIELDS

- Servo-motors
- Elevator industry
- Packaging and Production Lines
- Textile Machines
- Woodworking Machines
- Turning, Milling
- Machinery Industry
- Automation and Robots

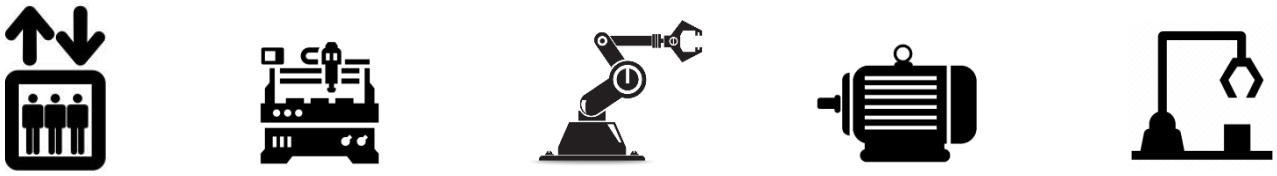

TEHNICAL SPECIFICATIONS

Mechanical Specifications	
Operating Speed	3000 RPM max.
Body Diameter	59.6 mm
Shaft Diameter	10 mm tapered
Operating Temperature	-25°C...+85°C
Storage Temperature	-40°C...+100°C
IP Protection Class	IP54
Weight	~250 gr
Material	Body: Aluminum
	Shaft: Stainless Steel
Electrical Specifications	
Supply Voltage	5 VDC
Current Consumption	≤100 mA
Reverse Polarity Protection of the power supply	Yes
Electrical Connection	4x0,14 mm^2 + 4x2x0,14 mm^2 shielded PVC cable
Sin/Cos Interface	
Frequency	≤180 kHz
Signal Level	1 Vpp (±10 %)
Short Circuit Protection	Yes
Pulse Rate	2048 ppr

ELECTRICAL CONNECTIONS

SIGNAL	CABLE COLOR
A(+)	Yellow
A(-)	Blue
B(+)	Green
B(-)	White
C(+)	Orange
C(-)	Purple
D(+)	Light Blue
D(-)	Brown
R(+)	Pink
R(-)	Grey
+V	Red
0V	Black

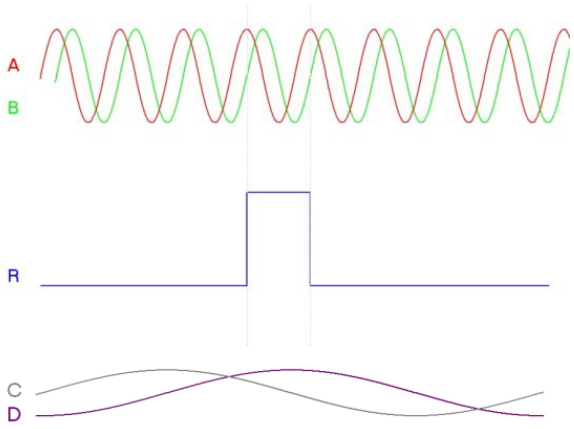

A and B signals are incremental signals, 2048 units are produced in one turn. R (reference) signal is generated 1 unit in 1 round. C and D signals are absolute signals. They are generated 1 unit in 1 round.

MECHANICAL DIMENSIONS (mm)

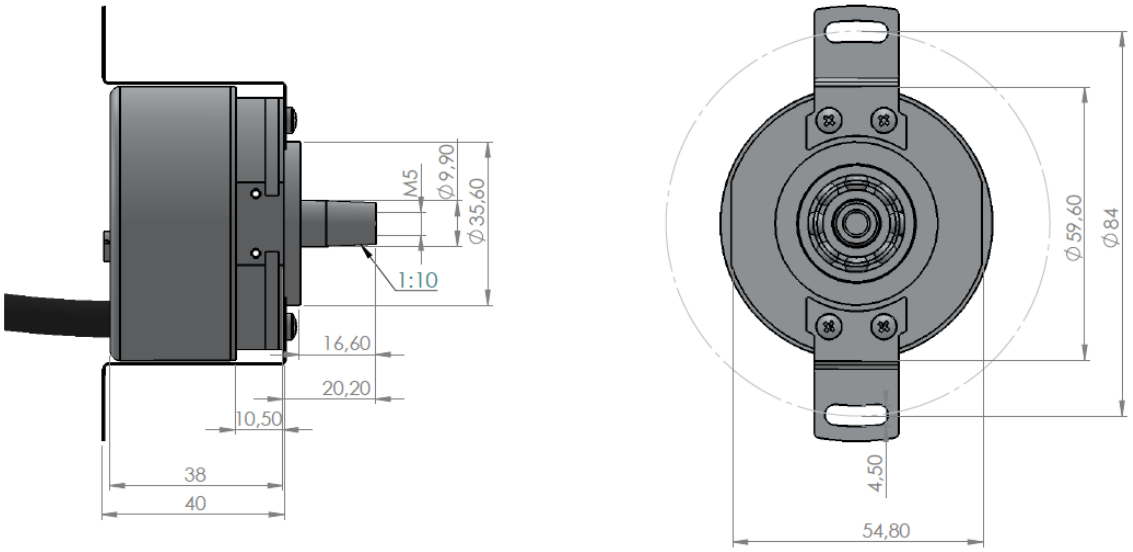

ORDER CODE

Model		Body Diameter		Supply Type		Flange Type
ARF	X	XXX	XXXX	XXX	XX	XX

Shaft Type
S : Shafted

Resolution
2048: 2048 pulse

Electrical Connection
3M : 3 m PVC cable
5M : 5 m PVC cable
7M : 10 m PVC cable
*Optionally, different cable lengths can be requested.

Atek Elektronik Sensör Teknolojileri Sanayi ve Ticaret A.Ş.
Gebze OSB, 800. Sokak, No:814 Gebze/KOCAELİ/TÜRKİYE
Tel: +90 262 673 76 00 Fax: +90 262 673 76 08
www.ateksensor.com İnfo@ateksensor.com